MIC-03-W

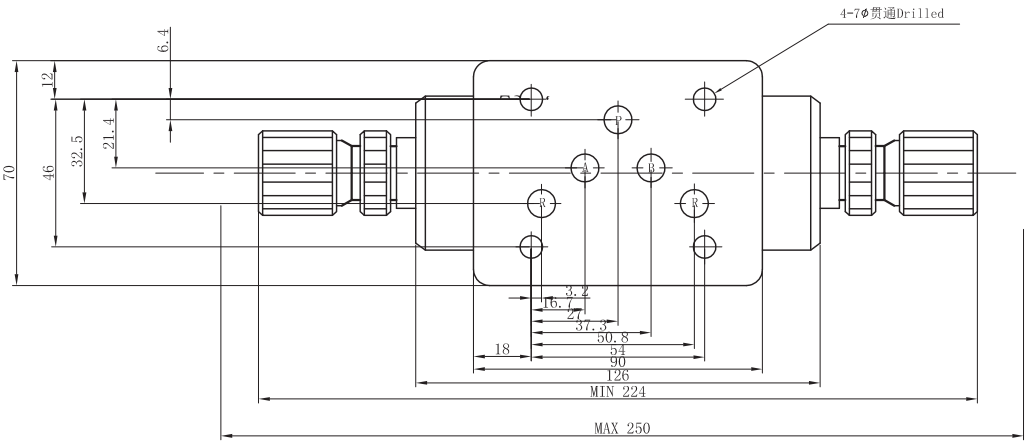
4-7φ贯通Drilled
6.4
12
21.4
32.5
46
70
P
A
B
S
R
3.2
16.1
27
37.3
50.8
54
90
126
18
MIN 224
MAX 250

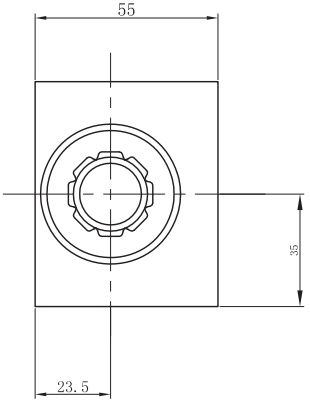
55
35
23.5